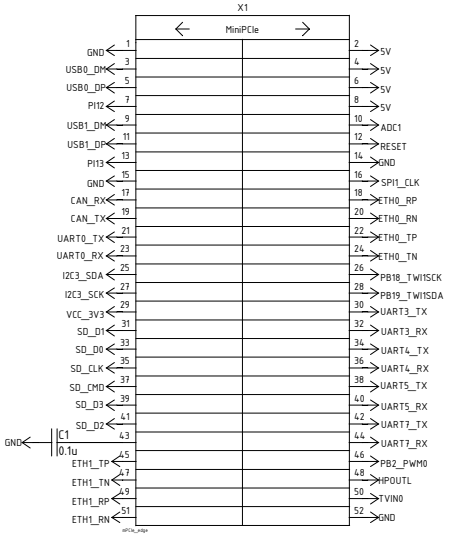
X1
MiniPCIe
GND 1
USB0_DM 3
USB0_DP 5
PI12 7
USB1_DM 9
USB1_DP 11
PI13 13
GND 15
CAN_RX 17
CAN_TX 19
UART0_TX 21
UART0_RX 23
I2C3_SDA 25
I2C3_SCK 27
VCC_3V3 29
SD_D1 31
SD_D0 33
SD_CLK 35
SD_CMD 37
SD_D3 39
SD_D2 41
43
GND C1 0.1u
ETH1_TP 45
ETH1_TN 47
ETH1_RP 49
ETH1_RN 51
2 5V
4 5V
6 5V
8 5V
10 ADC1
12 RESET
14 GND
16 SPI1_CLK
18 ETH0_RP
20 ETH0_RN
22 ETH0_TP
24 ETH0_TN
26 PB18_TWI1SCK
28 PB19_TWI1SDA
30 UART3_TX
32 UART3_RX
34 UART4_TX
36 UART4_RX
38 UART5_TX
40 UART5_RX
42 UART7_TX
44 UART7_RX
46 PB2_PWM0
48 HPOUTL
50 TVIN0
52 GND

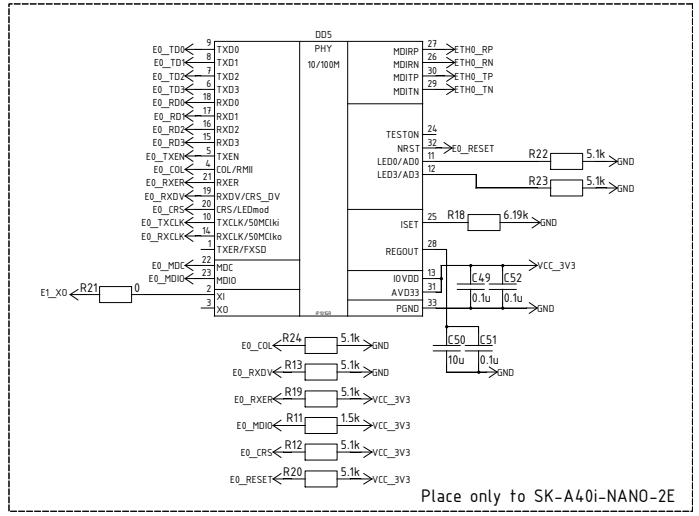
DD5
PHY
10/100M
E0_TD0 9 TXD0
E0_TD1 8 TXD1
E0_TD2 7 TXD2
E0_TD3 6 TXD3
E0_RD0 18 RXD0
E0_RD1 17 RXD1
E0_RD2 16 RXD2
E0_RD3 15 RXD3
E0_TXEN 5 TXEN
E0_COL 4 COL/RMII
E0_RXER 21 RXER
E0_RXDV 19 RXDV/CRS_DV
E0_CRS 20 CRS/LEDmod
E0_TXCLK 10 TXCLK/50MClki
E0_RXCLK 14 RXCLK/50MClko
1 TXER/FXSD
E0_MDC 22 MDC
E0_MDIO 23 MDIO
E1_XI 2 XI
E1_XO 3 XO
MDIRP 27 ETH0_RP
MDIRN 26 ETH0_RN
MDITP 30 ETH0_TP
MDITN 29 ETH0_TN
TESTON 24
NRST 32 E0_RESET
LED0/AD0 11 R22 5.1k GND
LED3/AD3 12 R23 5.1k GND
ISET 25 R18 6.19k GND
REGOUT 28 VCC_3V3
IOVDD 13 C49 C52
AVD33 31 0.1u 0.1u
PGND 33 GND
C50 C51
10u 0.1u GND
E1_XO R21 0
E0_COL R24 5.1k GND
E0_RXDV R13 5.1k GND
E0_RXER R19 5.1k VCC_3V3
E0_MDIO R11 1.5k VCC_3V3
E0_CRS R12 5.1k VCC_3V3
E0_RESET R20 5.1k VCC_3V3
Place only to SK-A40i-NANO-2E

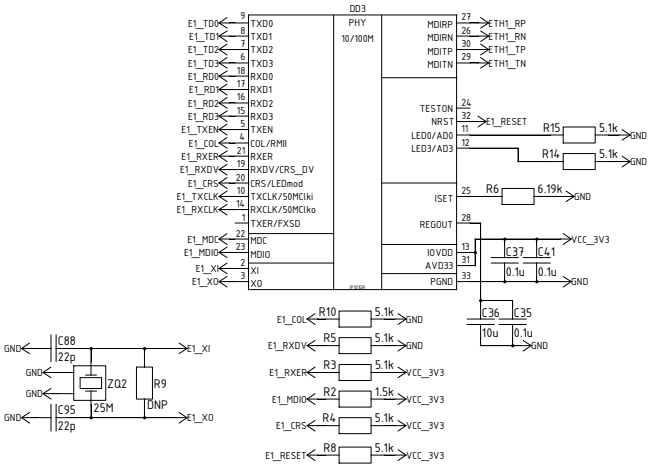
DD3
PHY
10/100M
E1_TD0 9 TXD0
E1_TD1 8 TXD1
E1_TD2 7 TXD2
E1_TD3 6 TXD3
E1_RD0 18 RXD0
E1_RD1 17 RXD1
E1_RD2 16 RXD2
E1_RD3 15 RXD3
E1_TXEN 5 TXEN
E1_COL 4 COL/RMII
E1_RXER 21 RXER
E1_RXDV 19 RXDV/CRS_DV
E1_CRS 20 CRS/LEDmod
E1_TXCLK 10 TXCLK/50MClki
E1_RXCLK 14 RXCLK/50MClko
1 TXER/FXSD
E1_MDC 22 MDC
E1_MDIO 23 MDIO
E1_XI 2 XI
E1_XO 3 XO
MDIRP 27 ETH1_RP
MDIRN 26 ETH1_RN
MDITP 30 ETH1_TP
MDITN 29 ETH1_TN
TESTON 24
NRST 32 E1_RESET
LED0/AD0 11 R15 5.1k GND
LED3/AD3 12 R14 5.1k GND
ISET 25 R6 6.19k GND
REGOUT 28 VCC_3V3
IOVDD 13 C37 C41
AVD33 31 0.1u 0.1u
PGND 33 GND
C36 C35
10u 0.1u GND
E1_COL R10 5.1k GND
E1_RXDV R5 5.1k GND
E1_RXER R3 5.1k VCC_3V3
E1_MDIO R2 1.5k VCC_3V3
E1_CRS R4 5.1k VCC_3V3
E1_RESET R8 5.1k VCC_3V3

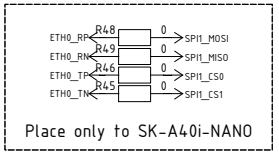
ETH0_RP R48 0 SPI1_MOSI
ETH0_RN R49 0 SPI1_MISO
ETH0_TP R46 0 SPI1_CS0
ETH0_TN R45 0 SPI1_CS1
Place only to SK-A40i-NANO

GND C88 22p
GND
GND
GND C95 22p
ZQ2 25M
R9 DNP
E1_XI
E1_XO

A40i-2eth

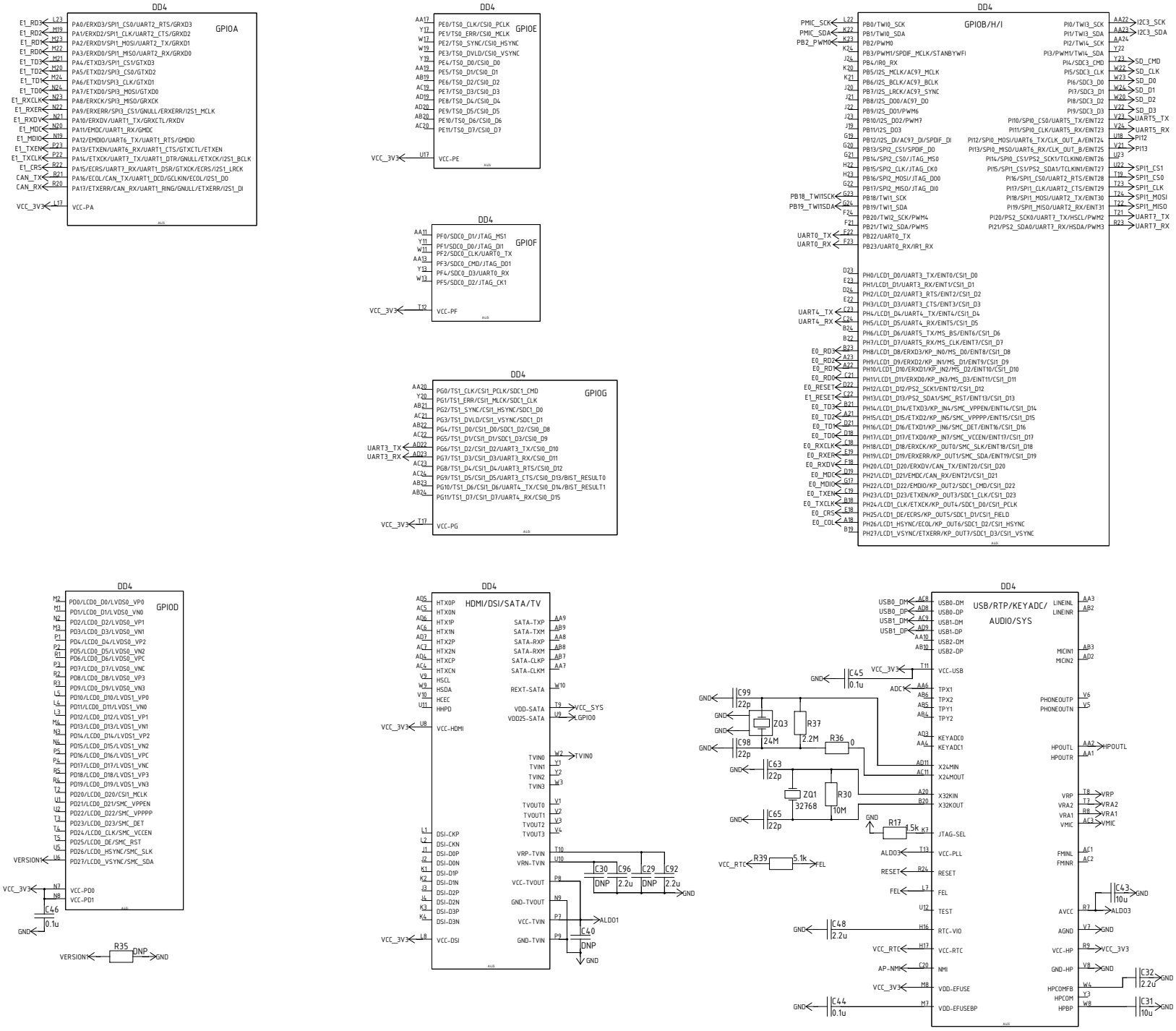
DD4
GPIOA
PA0/ERXD3/SPI1_CS0/UART2_RTS/GRXD3
PA1/ERXD2/SPI1_CLK/UART2_CTS/GRXD2
PA2/ERXD1/SPI1_MOSI/UART2_TX/GRXD1
PA3/ERXD0/SPI1_MISO/UART2_RX/GRXD0
PA4/ETXD3/SPI1_CS1/GTXD3
PA5/ETXD2/SPI3_CS0/GTXD2
PA6/ETXD1/SPI3_CLK/GTXD1
PA7/ETXD0/SPI3_MOSI/GTXD0
PA8/ERXCK/SPI3_MISO/GRXCK
PA9/ERXERR/SPI3_CS1/GNULL/ERXERR/I2S1_MCLK
PA10/ERXDV/UART1_TX/GRXCTL/RXDV
PA11/EMDC/UART1_RX/GMDC
PA12/EMDIO/UART6_TX/UART1_RTS/GMDIO
PA13/ETXEN/UART6_RX/UART1_CTS/GTXCTL/ETXEN
PA14/ETXCK/UART7_TX/UART1_DTR/GNULL/ETXCK/I2S1_BCLK
PA15/ECRS/UART7_RX/UART1_DSR/GTXCK/ECRS/I2S1_LRCK
PA16/ECOL/CAN_TX/UART1_DCD/GCLKIN/ECOL/I2S1_DO
PA17/ETXERR/CAN_RX/UART1_RING/GNULL/ETXERR/I2S1_DI
VCC-PA
E1_RD3
E1_RD2
E1_RD1
E1_RD0
E1_TD3
E1_TD2
E1_TD1
E1_TD0
E1_RXCLK
E1_RXER
E1_RXDV
E1_MDC
E1_MDIO
E1_TXEN
E1_TXCLK
E1_CRS
CAN_TX
CAN_RX
VCC_3V3
DD4
GPIOE
PE0/TS0_CLK/CSI0_PCLK
PE1/TS0_ERR/CSI0_MCLK
PE2/TS0_SYNC/CSI0_HSYNC
PE3/TS0_DVLD/CSI0_VSYNC
PE4/TS0_D0/CSI0_D0
PE5/TS0_D1/CSI0_D1
PE6/TS0_D2/CSI0_D2
PE7/TS0_D3/CSI0_D3
PE8/TS0_D4/CSI0_D4
PE9/TS0_D5/CSI0_D5
PE10/TS0_D6/CSI0_D6
PE11/TS0_D7/CSI0_D7
VCC-PE
VCC_3V3
DD4
GPIOF
PF0/SDC0_D1/JTAG_MS1
PF1/SDC0_D0/JTAG_DI1
PF2/SDC0_CLK/UART0_TX
PF3/SDC0_CMD/JTAG_DO1
PF4/SDC0_D3/UART0_RX
PF5/SDC0_D2/JTAG_CK1
VCC-PF
VCC_3V3
DD4
GPIOG
PG0/TS1_CLK/CSI1_PCLK/SDC1_CMD
PG1/TS1_ERR/CSI1_MLCK/SDC1_CLK
PG2/TS1_SYNC/CSI1_HSYNC/SDC1_D0
PG3/TS1_DVLD/CSI1_VSYNC/SDC1_D1
PG4/TS1_D0/CSI1_D0/SDC1_D2/CSI0_D8
PG5/TS1_D1/CSI1_D1/SDC1_D3/CSI0_D9
PG6/TS1_D2/CSI1_D2/UART3_TX/CSI0_D10
PG7/TS1_D3/CSI1_D3/UART3_RX/CSI0_D11
PG8/TS1_D4/CSI1_D4/UART3_RTS/CSI0_D12
PG9/TS1_D5/CSI1_D5/UART3_CTS/CSI0_D13/BIST_RESULT0
PG10/TS1_D6/CSI1_D6/UART4_TX/CSI0_D14/BIST_RESULT1
PG11/TS1_D7/CSI1_D7/UART4_RX/CSI0_D15
UART3_TX
UART3_RX
VCC-PG
VCC_3V3
DD4
GPIOB/H/I
PB0/TWI0_SCK
PB1/TWI0_SDA
PB2/PWM0
PB3/PWM1/SPDIF_MCLK/STANBYWFI
PB4/IR0_RX
PB5/I2S_MCLK/AC97_MCLK
PB6/I2S_BCLK/AC97_BCLK
PB7/I2S_LRCK/AC97_SYNC
PB8/I2S_DO0/AC97_DO
PB9/I2S_DO1/PWM6
PB10/I2S_DO2/PWM7
PB11/I2S_DO3
PB12/I2S_DI/AC97_DI/SPDIF_DI
PB13/SPI2_CS1/SPDIF_DO
PB14/SPI2_CS0/JTAG_MS0
PB15/SPI2_CLK/JTAG_CK0
PB16/SPI2_MOSI/JTAG_DO0
PB17/SPI2_MISO/JTAG_DI0
PB18/TWI1_SCK
PB19/TWI1_SDA
PB20/TWI2_SCK/PWM4
PB21/TWI2_SDA/PWM5
PB22/UART0_TX
PB23/UART0_RX/IR1_RX
PI0/TWI3_SCK
PI1/TWI3_SDA
PI2/TWI4_SCK
PI3/PWM1/TWI4_SDA
PI4/SDC3_CMD
PI5/SDC3_CLK
PI6/SDC3_D0
PI7/SDC3_D1
PI8/SDC3_D2
PI9/SDC3_D3
PI10/SPI0_CS0/UART5_TX/EINT22
PI11/SPI0_CLK/UART5_RX/EINT23
PI12/SPI0_MOSI/UART6_TX/CLK_OUT_A/EINT24
PI13/SPI0_MISO/UART6_RX/CLK_OUT_B/EINT25
PI14/SPI0_CS1/PS2_SCK1/TCLKIN0/EINT26
PI15/SPI1_CS1/PS2_SDA1/TCLKIN1/EINT27
PI16/SPI1_CS0/UART2_RTS/EINT28
PI17/SPI1_CLK/UART2_CTS/EINT29
PI18/SPI1_MOSI/UART2_TX/EINT30
PI19/SPI1_MISO/UART2_RX/EINT31
PI20/PS2_SCK0/UART7_TX/HSCL/PWM2
PI21/PS2_SDA0/UART7_RX/HSDA/PWM3
PH0/LCD1_D0/UART3_TX/EINT0/CSI1_D0
PH1/LCD1_D1/UART3_RX/EINT1/CSI1_D1
PH2/LCD1_D2/UART3_RTS/EINT2/CSI1_D2
PH3/LCD1_D3/UART3_CTS/EINT3/CSI1_D3
PH4/LCD1_D4/UART4_TX/EINT4/CSI1_D4
PH5/LCD1_D5/UART4_RX/EINT5/CSI1_D5
PH6/LCD1_D6/UART5_TX/MS_BS/EINT6/CSI1_D6
PH7/LCD1_D7/UART5_RX/MS_CLK/EINT7/CSI1_D7
PH8/LCD1_D8/ERXD3/KP_IN0/MS_D0/EINT8/CSI1_D8
PH9/LCD1_D9/ERXD2/KP_IN1/MS_D1/EINT9/CSI1_D9
PH10/LCD1_D10/ERXD1/KP_IN2/MS_D2/EINT10/CSI1_D10
PH11/LCD1_D11/ERXD0/KP_IN3/MS_D3/EINT11/CSI1_D11
PH12/LCD1_D12/PS2_SCK1/EINT12/CSI1_D12
PH13/LCD1_D13/PS2_SDA1/SMC_RST/EINT13/CSI1_D13
PH14/LCD1_D14/ETXD3/KP_IN4/SMC_VPPEN/EINT14/CSI1_D14
PH15/LCD1_D15/ETXD2/KP_IN5/SMC_VPPPP/EINT15/CSI1_D15
PH16/LCD1_D16/ETXD1/KP_IN6/SMC_DET/EINT16/CSI1_D16
PH17/LCD1_D17/ETXD0/KP_IN7/SMC_VCCEN/EINT17/CSI1_D17
PH18/LCD1_D18/ERXCK/KP_OUT0/SMC_SLK/EINT18/CSI1_D18
PH19/LCD1_D19/ERXERR/KP_OUT1/SMC_SDA/EINT19/CSI1_D19
PH20/LCD1_D20/ERXDV/CAN_TX/EINT20/CSI1_D20
PH21/LCD1_D21/EMDC/CAN_RX/EINT21/CSI1_D21
PH22/LCD1_D22/EMDIO/KP_OUT2/SDC1_CMD/CSI1_D22
PH23/LCD1_D23/ETXEN/KP_OUT3/SDC1_CLK/CSI1_D23
PH24/LCD1_CLK/ETXCK/KP_OUT4/SDC1_D0/CSI1_PCLK
PH25/LCD1_DE/ECRS/KP_OUT5/SDC1_D1/CSI1_FIELD
PH26/LCD1_HSYNC/ECOL/KP_OUT6/SDC1_D2/CSI1_HSYNC
PH27/LCD1_VSYNC/ETXERR/KP_OUT7/SDC1_D3/CSI1_VSYNC
PMIC_SCK
PMIC_SDA
PB2_PWM0
PB18_TWI1SCK
PB19_TWI1SDA
UART0_TX
UART0_RX
UART4_TX
UART4_RX
I2C3_SCK
I2C3_SDA
SD_CMD
SD_CLK
SD_D0
SD_D1
SD_D2
SD_D3
UART5_TX
UART5_RX
PI12
PI13
SPI1_CS1
SPI1_CS0
SPI1_CLK
SPI1_MOSI
SPI1_MISO
UART7_TX
UART7_RX
DD4
GPIOD
PD0/LCD0_D0/LVDS0_VP0
PD1/LCD0_D1/LVDS0_VN0
PD2/LCD0_D2/LVDS0_VP1
PD3/LCD0_D3/LVDS0_VN1
PD4/LCD0_D4/LVDS0_VP2
PD5/LCD0_D5/LVDS0_VN2
PD6/LCD0_D6/LVDS0_VPC
PD7/LCD0_D7/LVDS0_VNC
PD8/LCD0_D8/LVDS0_VP3
PD9/LCD0_D9/LVDS0_VN3
PD10/LCD0_D10/LVDS1_VP0
PD11/LCD0_D11/LVDS1_VN0
PD12/LCD0_D12/LVDS1_VP1
PD13/LCD0_D13/LVDS1_VN1
PD14/LCD0_D14/LVDS1_VP2
PD15/LCD0_D15/LVDS1_VN2
PD16/LCD0_D16/LVDS1_VPC
PD17/LCD0_D17/LVDS1_VNC
PD18/LCD0_D18/LVDS1_VP3
PD19/LCD0_D19/LVDS1_VN3
PD20/LCD0_D20/CSI1_MCLK
PD21/LCD0_D21/SMC_VPPEN
PD22/LCD0_D22/SMC_VPPPP
PD23/LCD0_D23/SMC_DET
PD24/LCD0_CLK/SMC_VCCEN
PD25/LCD0_DE/SMC_RST
PD26/LCD0_HSYNC/SMC_SLK
PD27/LCD0_VSYNC/SMC_SDA
VERSION
VCC_3V3
VCC-PD0
VCC-PD1
C46
0.1u
GND
R35
DNP
DD4
HDMI/DSI/SATA/TV
HTX0P
HTX0N
HTX1P
HTX1N
HTX2P
HTX2N
HTXCP
HTXCN
HSCL
HSDA
HCEC
HHPD
VCC-HDMI
SATA-TXP
SATA-TXM
SATA-RXP
SATA-RXM
SATA-CLKP
SATA-CLKM
REXT-SATA
VDD-SATA
VDD25-SATA
VCC_SYS
GPIO0
TVIN0
TVIN1
TVIN2
TVIN3
TVOUT0
TVOUT1
TVOUT2
TVOUT3
DSI-CKP
DSI-CKN
DSI-D0P
DSI-D0N
DSI-D1P
DSI-D1N
DSI-D2P
DSI-D2N
DSI-D3P
DSI-D3N
VRP-TVIN
VRN-TVIN
VCC-TVOUT
GND-TVOUT
VCC-TVIN
GND-TVIN
VCC-DSI
ALDO1
C30
C96
C29
C92
DNP
2.2u
C40
DNP
DD4
USB/RTP/KEYADC/
AUDIO/SYS
USB0-DM
USB0-DP
USB1-DM
USB1-DP
VCC-USB
TPX1
TPX2
TPY1
TPY2
KEYADC0
KEYADC1
X24MIN
X24MOUT
X32KIN
X32KOUT
JTAG-SEL
VCC-PLL
RESET
FEL
TEST
RTC-VIO
VCC-RTC
NMI
VDD-EFUSE
VDD-EFUSEBP
LINEINL
LINEINR
MICIN1
MICIN2
PHONEOUTP
PHONEOUTN
HPOUTL
HPOUTR
VRP
VRA2
VRA1
VMIC
FMINL
FMINR
AVCC
AGND
VCC-HP
GND-HP
HPCOMFB
HPCOM
HPBP
VCC_3V3
ADC1
ALDO3
VCC_RTC
AP-NMI
C45
0.1u
C99
22p
Z03
24M
R37
2.2M
R36
0
C98
22p
C63
22p
Z01
32768
R30
10M
C65
22p
R17
4.5k
R39
5.1k
FEL
C48
2.2u
C44
0.1u
C43
10u
C32
2.2u
C31
10u
C34
10u
C33
DNP
C39
10u
R7
200k
C42
2.2u
J1
FEL
GND
VRP
VRA2
VRA1
VMIC
HPOUTL

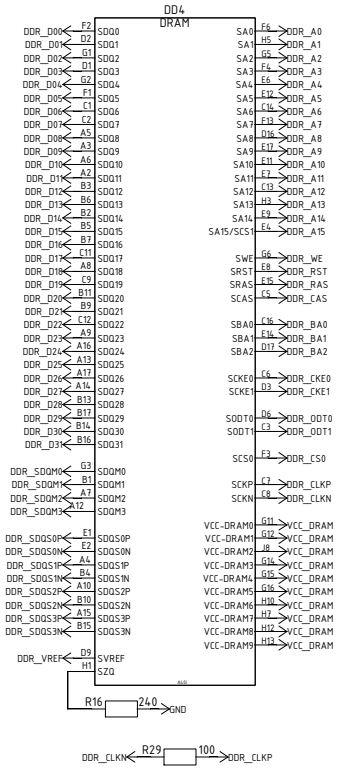
DD4
DRAM
DDR_D00 F2 SDQ0
DDR_D01 D2 SDQ1
DDR_D02 G1 SDQ2
DDR_D03 D1 SDQ3
DDR_D04 G2 SDQ4
DDR_D05 F1 SDQ5
DDR_D06 C1 SDQ6
DDR_D07 C2 SDQ7
DDR_D08 A5 SDQ8
DDR_D09 A3 SDQ9
DDR_D10 A6 SDQ10
DDR_D11 A2 SDQ11
DDR_D12 B3 SDQ12
DDR_D13 B6 SDQ13
DDR_D14 B2 SDQ14
DDR_D15 B5 SDQ15
DDR_D16 B7 SDQ16
DDR_D17 C11 SDQ17
DDR_D18 A8 SDQ18
DDR_D19 C9 SDQ19
DDR_D20 B11 SDQ20
DDR_D21 B9 SDQ21
DDR_D22 C12 SDQ22
DDR_D23 A9 SDQ23
DDR_D24 A16 SDQ24
DDR_D25 A13 SDQ25
DDR_D26 A17 SDQ26
DDR_D27 A14 SDQ27
DDR_D28 B13 SDQ28
DDR_D29 B17 SDQ29
DDR_D30 B14 SDQ30
DDR_D31 B16 SDQ31
DDR_SDQM0 G3 SDQM0
DDR_SDQM1 B1 SDQM1
DDR_SDQM2 A7 SDQM2
DDR_SDQM3 A12 SDQM3
DDR_SDQS0P E1 SDQS0P
DDR_SDQS0N E2 SDQS0N
DDR_SDQS1P A4 SDQS1P
DDR_SDQS1N B4 SDQS1N
DDR_SDQS2P A10 SDQS2P
DDR_SDQS2N B10 SDQS2N
DDR_SDQS3P A15 SDQS3P
DDR_SDQS3N B15 SDQS3N
DDR_VREF D9 SVREF
H1 SZQ
SA0 F6 DDR_A0
SA1 H5 DDR_A1
SA2 G5 DDR_A2
SA3 F4 DDR_A3
SA4 E6 DDR_A4
SA5 E12 DDR_A5
SA6 C16 DDR_A6
SA7 F13 DDR_A7
SA8 D16 DDR_A8
SA9 E17 DDR_A9
SA10 E11 DDR_A10
SA11 E7 DDR_A11
SA12 C13 DDR_A12
SA13 H3 DDR_A13
SA14 E9 DDR_A14
SA15/SCS1 E4 DDR_A15
SWE G6 DDR_WE
SRST E8 DDR_RST
SRAS E15 DDR_RAS
SCAS C5 DDR_CAS
SBA0 C16 DDR_BA0
SBA1 E14 DDR_BA1
SBA2 D17 DDR_BA2
SCKE0 C6 DDR_CKE0
SCKE1 D3 DDR_CKE1
SODT0 D6 DDR_ODT0
SODT1 C3 DDR_ODT1
SCS0 F3 DDR_CS0
SCKP C7 DDR_CLKP
SCKN C8 DDR_CLKN
VCC-DRAM0 G11 VCC_DRAM
VCC-DRAM1 G12 VCC_DRAM
VCC-DRAM2 J8 VCC_DRAM
VCC-DRAM3 G14 VCC_DRAM
VCC-DRAM4 G15 VCC_DRAM
VCC-DRAM5 G16 VCC_DRAM
VCC-DRAM6 H14 VCC_DRAM
VCC-DRAM7 H7 VCC_DRAM
VCC-DRAM8 H12 VCC_DRAM
VCC-DRAM9 H13 VCC_DRAM
R16 240 GND
DDR_CLKN R29 100 DDR_CLKP

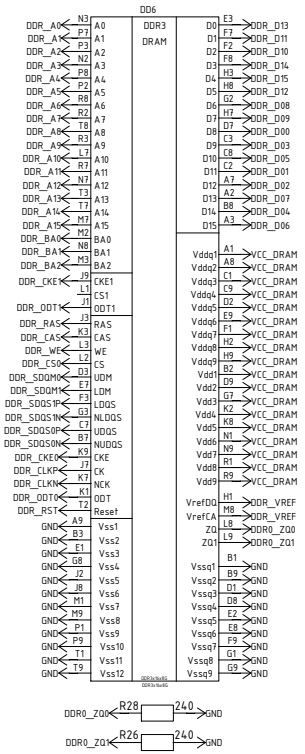
DD6
DDR3
DRAM
DDR_A0 N3 A0
DDR_A1 P7 A1
DDR_A2 P3 A2
DDR_A3 N2 A3
DDR_A4 P8 A4
DDR_A5 P2 A5
DDR_A6 R8 A6
DDR_A7 R2 A7
DDR_A8 T8 A8
DDR_A9 R3 A9
DDR_A10 L7 A10
DDR_A11 R7 A11
DDR_A12 N7 A12
DDR_A13 T3 A13
DDR_A14 T7 A14
DDR_A15 M7 A15
DDR_BA0 M2 BA0
DDR_BA1 N8 BA1
DDR_BA2 M3 BA2
DDR_CKE1 J9 CKE1
DDR_ODT1 L1 ODT1
DDR_RAS J1 RAS
DDR_CAS J3 CAS
DDR_WE K3 WE
DDR_CS0 L3 CS
DDR_SDQM0 L2 UDM
DDR_SDQM1 D3 LDM
DDR_SDQS1P E7 UDQS
DDR_SDQS1N F3 NUDQS
DDR_SDQS0P G3 LDQS
DDR_SDQS0N C7 NLDQS
DDR_CKE0 B7 CKE
DDR_CLKP K9 CK
DDR_CLKN J7 NCK
DDR_ODT0 K7 ODT
DDR_RST K1 Reset
T2
GND A9 Vss1
GND B3 Vss2
GND E1 Vss3
GND G8 Vss4
GND J2 Vss5
GND J8 Vss6
GND M1 Vss7
GND M9 Vss8
GND P1 Vss9
GND P9 Vss10
GND T1 Vss11
GND T9 Vss12
D0 E3 DDR_D13
D1 F7 DDR_D11
D2 F2 DDR_D10
D3 F8 DDR_D14
D4 H3 DDR_D15
D5 H8 DDR_D12
D6 G2 DDR_D08
D7 H7 DDR_D09
D8 D7 DDR_D00
D9 C3 DDR_D03
D10 C8 DDR_D05
D11 C2 DDR_D01
D12 A7 DDR_D02
D13 A2 DDR_D07
D14 B8 DDR_D04
D15 A3 DDR_D06
Vddq1 A1 VCC_DRAM
Vddq2 A8 VCC_DRAM
Vddq3 C1 VCC_DRAM
Vddq4 C9 VCC_DRAM
Vddq5 D2 VCC_DRAM
Vddq6 E9 VCC_DRAM
Vddq7 F1 VCC_DRAM
Vddq8 H2 VCC_DRAM
Vddq9 H9 VCC_DRAM
Vdd1 B2 VCC_DRAM
Vdd2 D9 VCC_DRAM
Vdd3 G7 VCC_DRAM
Vdd4 K2 VCC_DRAM
Vdd5 K8 VCC_DRAM
Vdd6 N1 VCC_DRAM
Vdd7 N9 VCC_DRAM
Vdd8 R1 VCC_DRAM
Vdd9 R9 VCC_DRAM
VrefDQ H1 DDR_VREF
VrefCA M8 DDR_VREF
ZQ L8 DDR0_ZQ0
ZQ1 L9 DDR0_ZQ1
B1
Vssq1 B9 GND
Vssq2 D1 GND
Vssq3 D8 GND
Vssq4 E2 GND
Vssq5 E8 GND
Vssq6 F9 GND
Vssq7 G1 GND
Vssq8 G9 GND
Vssq9
DDR0_ZQ0 R28 240 GND
DDR0_ZQ1 R26 240 GND

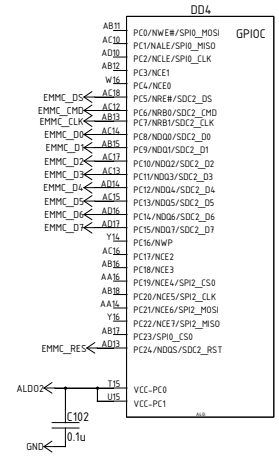
DD4
GPIOC
AB11 PC0/NWE#/SPI0_MOSI
AC10 PC1/NALE/SPI0_MISO
AD10 PC2/NCLE/SPI0_CLK
AB12 PC3/NCE1
W16 PC4/NCE0
EMMC_DS AC18 PC5/NRE#/SDC2_DS
EMMC_CMD AC12 PC6/NRB0/SDC2_CMD
EMMC_CLK AB13 PC7/NRB1/SDC2_CLK
EMMC_D0 AC14 PC8/NDQ0/SDC2_D0
EMMC_D1 AB15 PC9/NDQ1/SDC2_D1
EMMC_D2 AC17 PC10/NDQ2/SDC2_D2
EMMC_D3 AC13 PC11/NDQ3/SDC2_D3
EMMC_D4 AD14 PC12/NDQ4/SDC2_D4
EMMC_D5 AC15 PC13/NDQ5/SDC2_D5
EMMC_D6 AD16 PC14/NDQ6/SDC2_D6
EMMC_D7 AD17 PC15/NDQ7/SDC2_D7
Y16 PC16/NWP
AC16 PC17/NCE2
AB16 PC18/NCE3
AA16 PC19/NCE4/SPI2_CS0
AB18 PC20/NCE5/SPI2_CLK
AA15 PC21/NCE6/SPI2_MOSI
Y15 PC22/NCE7/SPI2_MISO
AB17 PC23/SPI0_CS0
EMMC_RES AD13 PC24/NDQS/SDC2_RST
ALDO2 T15 VCC-PC0
U15 VCC-PC1
C102 0.1u
GND

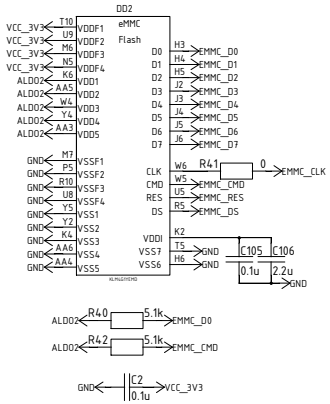
DD2
eMMC
Flash
VCC_3V3 T10 VDDF1
VCC_3V3 U9 VDDF2
VCC_3V3 M6 VDDF3
VCC_3V3 N5 VDDF4
ALDO2 K6 VDD1
ALDO2 AA5 VDD2
ALDO2 W4 VDD3
ALDO2 Y4 VDD4
ALDO2 AA3 VDD5
GND M7 VSSF1
GND P5 VSSF2
GND R10 VSSF3
GND U8 VSSF4
GND Y5 VSS1
GND Y2 VSS2
GND K4 VSS3
GND AA6 VSS4
GND AA4 VSS5
D0 H3 EMMC_D0
D1 H4 EMMC_D1
D2 H5 EMMC_D2
D3 J2 EMMC_D3
D4 J3 EMMC_D4
D5 J4 EMMC_D5
D6 J5 EMMC_D6
D7 J6 EMMC_D7
CLK W6 R41 0 EMMC_CLK
CMD W5 EMMC_CMD
RES U5 EMMC_RES
DS R5 EMMC_DS
VDDI K2
VSS7 T5 GND
VSS6 H6 GND
C105 0.1u
C106 2.2u
GND
ALDO2 R40 5.1k EMMC_D0
ALDO2 R42 5.1k EMMC_CMD
GND C2 0.1u VCC_3V3

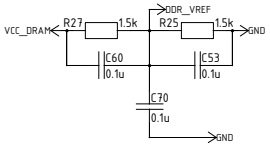
DDR_VREF
VCC_DRAM R27 1.5k
R25 1.5k GND
C60 0.1u
C53 0.1u
C70 0.1u
GND

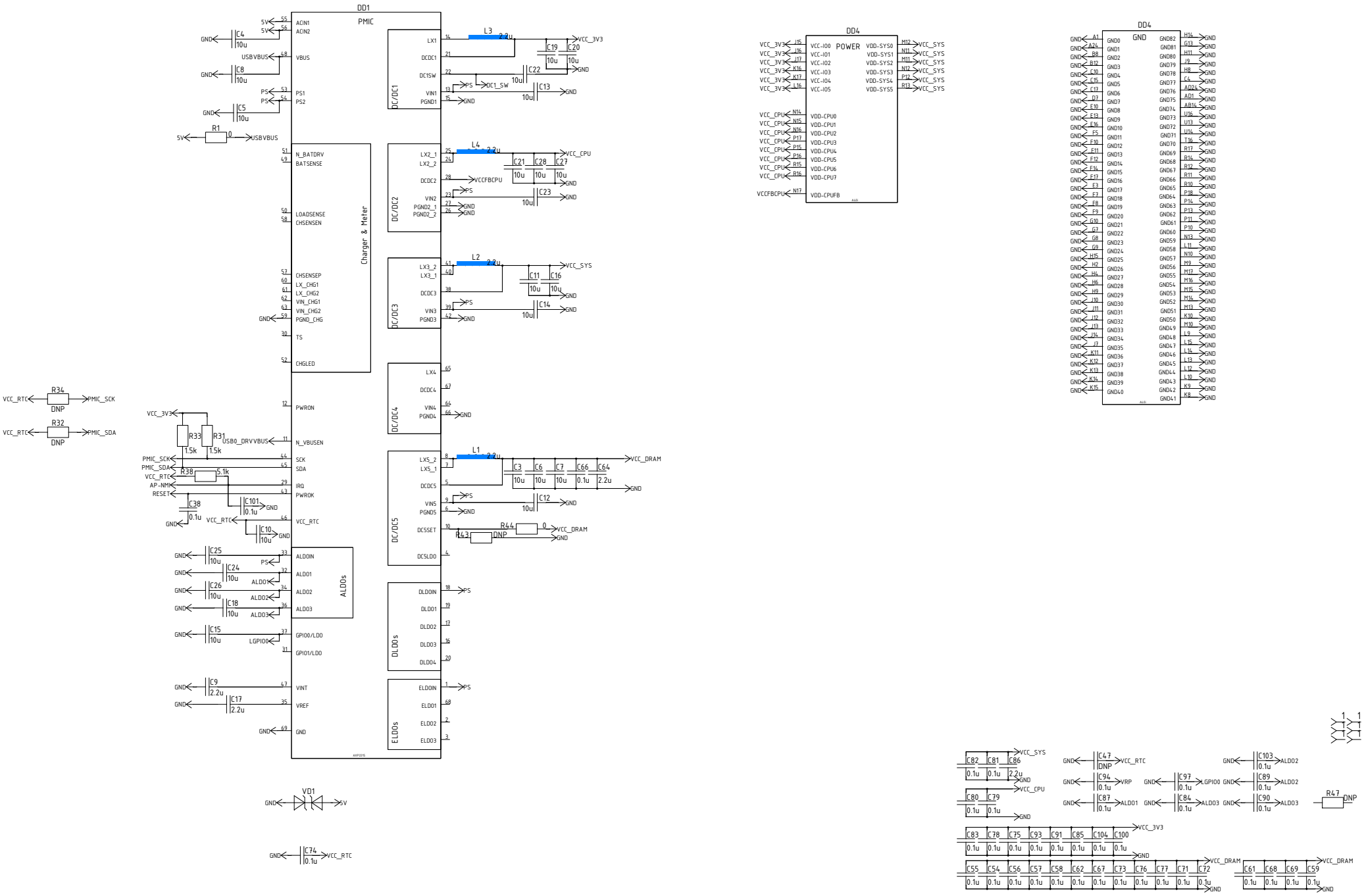
DD1
PMIC
ACIN1
ACIN2
VBUS
PS1
PS2
N_BATDRV
BATSENSE
LOADSENSE
CHSENSEN
CHSENSEP
LX_CHG1
LX_CHG2
VIN_CHG1
VIN_CHG2
PGND_CHG
TS
CHGLED
PWRON
N_VBUSEN
SCK
SDA
IRQ
PWROK
VCC_RTC
ALDOIN
ALDO1
ALDO2
ALDO3
GPIO0/LDO
GPIO1/LDO
VINT
VREF
GND
Charger & Meter
ALDOs
DC/DC1
DC/DC2
DC/DC3
DC/DC4
DC/DC5
DLDOs
ELDOs
LX1
DCDC1
DC1SW
VIN1
PGND1
LX2_1
LX2_2
DCDC2
VIN2
PGND2_1
PGND2_2
LX3_2
LX3_1
DCDC3
VIN3
PGND3
LX4
DCDC4
VIN4
PGND4
LX5_2
LX5_1
DCDC5
VIN5
PGND5
DCSSET
DCSLDO
DLDOIN
DLD01
DLD02
DLD03
DLD04
ELDOIN
ELD01
ELD02
ELD03
L3
L4
L2
L1
VCC_3V3
VCC_CPU
VCC_SYS
VCC_DRAM
VCCFBCPU
DC1_SW
R1
R34
R32
R33
R31
R38
R44
R43
DNP
VCC_RTC
PMIC_SCK
PMIC_SDA
USBVBUS
USB0_DRVVBUS
AP-NMI
RESET
VD1
5V
DD4
POWER
VCC-IO0
VCC-IO1
VCC-IO2
VCC-IO3
VCC-IO4
VCC-IO5
VDD-CPU0
VDD-CPU1
VDD-CPU2
VDD-CPU3
VDD-CPU4
VDD-CPU5
VDD-CPU6
VDD-CPU7
VDD-CPUFB
VDD-SYS0
VDD-SYS1
VDD-SYS2
VDD-SYS3
VDD-SYS4
VDD-SYS5
DD4
GND